Meas. Sci. Technol. **11** (2000) 454–458. Printed in the UK PII: S0957-0233(00)09249-3

Laser integrated measurement of surface roughness and micro-displacement

S H Wang†, C J Tay†, C Quan†, H M Shang† and Z F Zhou‡

† Department of Mechanical & Production Engineering, National University of Singapore, 10 Kent Ridge Crescent, 119 260 Singapore
‡ Department of Measuring and Control Engineering, Chengdu University of Science and Technology, Chengdu 610 065, People's Republic of China

Received 3 November 1999, in final form 31 January 2000, accepted for publication 22 February 2000

Abstract. An optical method based on laser scattering and optical triangulation for measurement of surface roughness and micro-displacement measurement is proposed. The technique allows evaluation of surface roughness and micro-displacement of a specimen using just one device. The principle of the method and the basic instrumentation design are described and the validity of the principle is demonstrated by experimental evaluations. Results show that, for specimens with surface roughnesses (R_a) in the range 0.005–0.1 μm, displacements in the range $\pm$300 μm can be readily measured.

Keywords: surface roughness, light scattering, micro-displacement, optical triangulation, non-contact measurement

1. Introduction

The importance of accurate measurement of surface roughness and micro-displacement in engineering applications can rarely be overemphasized. In recent years many techniques for measuring the surface roughness and micro-displacement have been developed [1–9]. Most of the reported works employ techniques that evaluate surface roughness and micro-displacement separately. However, with the demand on quality and the miniaturization in the precision industry, accurate multi-parameter evaluation is often required. For instance, the design and manufacture of engine cylinders for vehicles are never complete without measurement and specification of key parameters such as the surface roughness and micro-displacement of the cylinder bore and piston including the determination of the relative diameter and roundness. Using various devices, measurements can be obtained separately. However, the separate measuring procedures usually involve complicated set-ups and are time consuming.

This paper describes an optical technique for measuring the surface roughness and micro-displacement of a specimen by using an integrated set-up. The method is based on laser scattering and optical triangulation and the results show that simultaneous measurement of the surface roughness and micro-displacement of a component can readily be carried out.

2. Integrated measurement

In precision engineering measurement, surface roughness and micro-displacement measurements, which are based on light scattering and optical triangulation techniques respectively, are often conducted using separate apparatus. However, these two optical methods involve three similar procedures, namely emission, delivery through an optical path and detection of light. As shown in figure 1(a), when a beam of laser is directed onto a rough surface, the scattered light band would emerge with a reflection pattern and light intensity distribution according to rough surface scattering theory [10]. Optical triangulation as shown in figure 1(b) indicates that the displacement (δ) of the object can be determined by detecting the displacement Δ of the imaged laser beam spot on an electro-optical detector [11]. The image patterns that are recorded on the electro-optical detector include the scattered light band and the specularly reflected light beam, which are used for roughness and micro-displacement measurement respectively. These two image patterns have different light intensity distributions. The scattered light band is reflected over an area with scattered angle from $-\pi/2$ to $\pi/2$ [12]. However, the specularly reflected light beam is similar to a laser beam with a Gaussian distribution and, depending upon the magnification of the optical set-up, is distributed over a small area. The

0957-0233/00/050454+05$30.00 © 2000 IOP Publishing Ltd

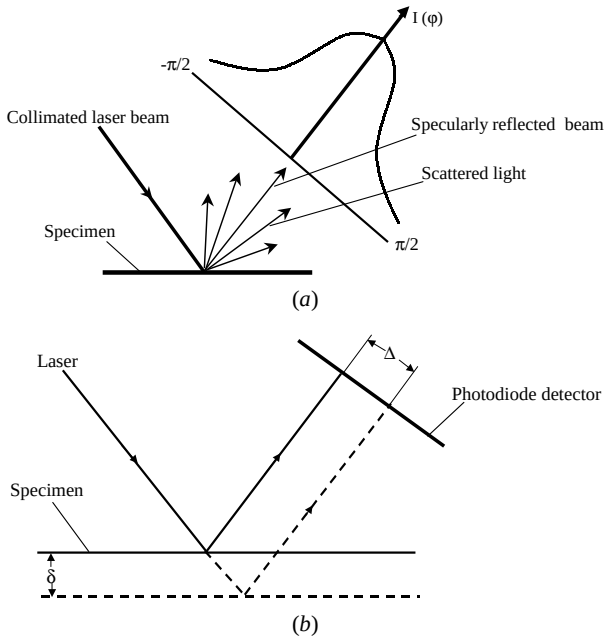

Figure 1. (*a*) Light scattering from a surface with roughness. (*b*) Optical triangulation for measurement of micro-displacement.

simultaneous measurement of surface roughness and micro-displacement would necessitate an optical set-up to direct a laser beam onto a specimen surface and subsequently record the light scattering band and the specularly reflected light beam. A linear photodiode would be suitable for recording the light intensity distributions.

3. Principles of the methods

3.1. Surface roughness measurement based on light scattering

The relationship between scattered light and surface roughness has been studied widely [13–15]. As shown in figure 1(*a*), when a collimated laser is directed on a rough surface, light is scattered on two sides of the specular direction. For smooth surface corresponding to a small R_a value, the intensity of the specularly reflected beam would be higher with relatively less scattered light. A direct calculation of the standard roughness value from the scattered light intensity distribution is difficult since precise knowledge of the electromagnetic boundary condition is required. The parametric method is an effective way of determining the surface roughness indirectly [16]. In this paper, we utilize a characteristic value S_n developed by Brodmann and Gerstorfer [17] that has a direct correlation to the surface roughness parameter R_a. The scattered light intensity distribution S_n can be described by

$$S_n = K^2 \sum_{i=1}^{n} (i - \bar{i})^2 P_i \tag{1}$$

$$\bar{i} = \sum_{i=1}^{n} i P_i \tag{2}$$

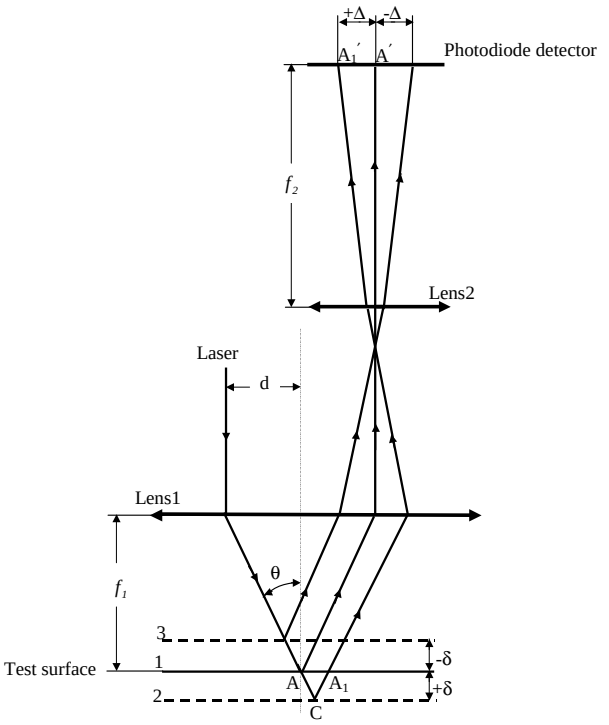

Figure 2. A schematic diagram of the optical path for triangulation.

$$P_i = I_i \Big/ \sum_{i=1}^{n} I_i \tag{3}$$

where i is the diode array number of a linear photodiode array detector, P_i is the normalized scattered light intensity at the ith diode, I_i is the intensity signal level of the ith diode, $\bar{i}$ is the mean intensity value of the diode array and k is an optical constant based on the geometrical-optical parameter. It is important to acquire as much scattered light as possible. This can be achieved by using an optical lens with as small an F number as possible.

3.2. Micro-displacement measurement based on optical triangulation

As shown in figure 2, a collimated laser beam at a distance d from the optical axis is directed through lens 1 at point A on a test surface placed at the focal plane of lens 1. The light beam reflected from point A passes through lenses 1 and 2 and falls on point A′ on the photodetector which is located at the focal plane of lens 2. The light beam displacement Δ on the detector corresponds to a deflection δ of the test surface. Using the geometrical relation, we obtain

$$\tan\theta = d/f_1 \tag{4}$$

where θ is the incidence angle of the laser and f_1 is the focal length of lens 1. When the test surface is displaced from plane 1 to plane 2 by a distance δ, point A is shifted to A_1 with its corresponding image at A_1' on the detector. From geometry, the distance AA_1 can be written as

$$AA_1 = 2\delta \tan\theta \tag{5}$$

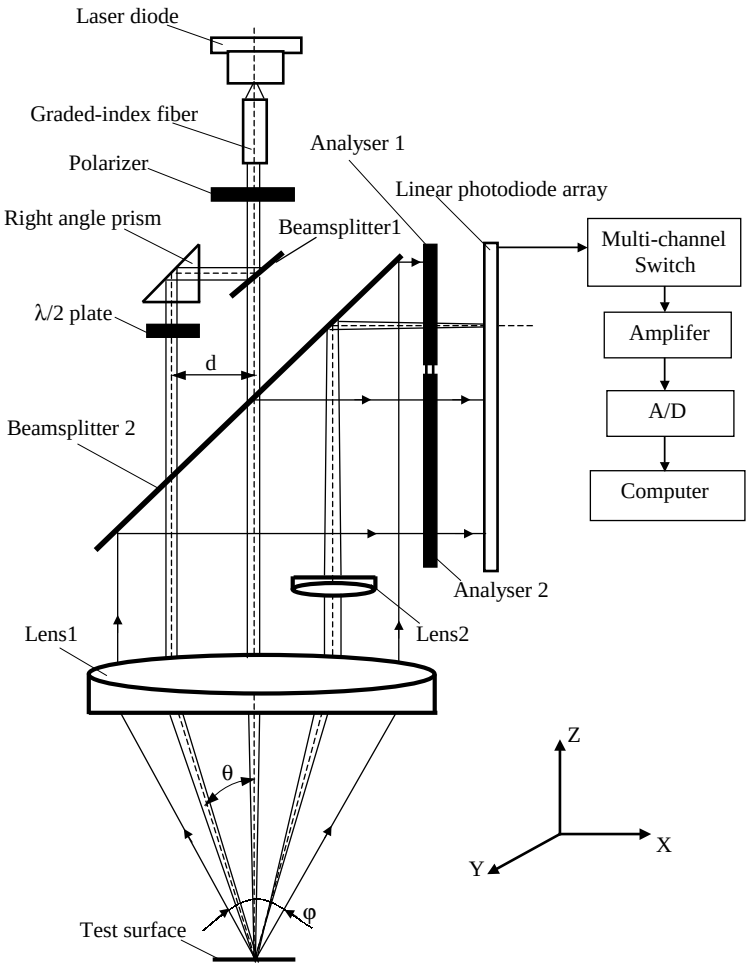

Figure 3. The optical set-up.

The displacement Δ on the detector corresponding to the displacement AA_1 can be obtained as

$$\Delta = \beta A A_1 \tag{6}$$

where $\beta = f_2/f_1$ represents the total magnification of lens 1 and lens 2. On combining equations (4)–(6), we have

$$\Delta = \pm \frac{2d\beta}{f_1}\delta \tag{7}$$

where the '+' and '−' signs correspond to displacements towards or away from the optical axis respectively. Equation (7) indicates that there is a linear relationship between the deflection (δ) and the light beam displacement (Δ) on the photodiode array located at the focal plane of lens 2. Since the photodiode array has a relatively large pixel size, there is a limitation on determining Δ accurately. To locate the centre of the light beam on the detector, two separate photodiodes in the photodiode array are used. A change in signal of the photodiodes would indicate a change in displacement of the test surface. The output signal S_Δ from the photodiode array is given by

$$S_\Delta = K\frac{I_1 - I_2}{I_1 + I_2} \tag{8}$$

where I_1 and I_2 are the laser beam intensities detected by two photodiodes of the photodiode array; K is a constant related to the amplification of the processing circuit. Using equation (8) the micro-displacement δ can be determined.

4. The optical arrangement

The optical arrangement is shown in figure 3. A laser beam emitted from a laser diode (power 3 mW, wavelength $\lambda = 780$ nm) is collimated by a graded-index fibre. The collimated beam emerging from the fibre passes through a polarizer whose axis of polarization is in the X-direction. The beam is then divided into two beams by beamsplitter 1 (reflection factor 30%). One of the beams is reflected by a right-angle prism placed at a distance d from the optical axis of lens 1 and is directed at a $\lambda/2$ plate, which allows laser polarization in the Y-direction. The laser beam emerging from the $\lambda/2$ plate passes through beamsplitter 2 and lens 1 and is directed at an incidence angle θ onto the test surface. The light beam reflected off the test surface passes through lens 1, lens 2, beamsplitter 2, analyser 1 and finally onto the photodiode array located at the focal plane of lens 2. It should be noted that only light beams polarized in the Y-direction can pass through analyser 1. This arrangement ensures that

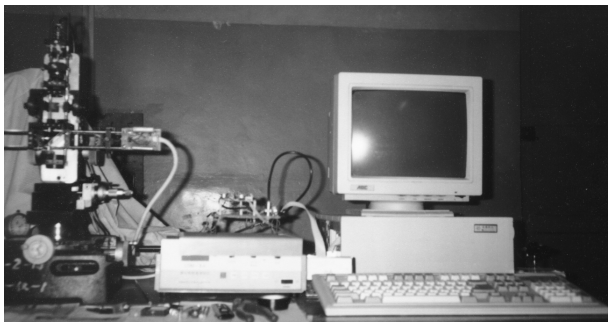

Figure 4. The experimental set-up.

one obtains a good signal-to-noise ratio for measurement of the displacement.

For surface roughness measurement, the beam polarized in the X-direction emerges from beamsplitter 1, passes through beamsplitter 2 and is directed at the test surface along the optical axis of lens 1. The scattered light field from the test surface with a scattered angle φ is captured by lens 1. It is then directed at analyser 2 after being reflected from beamsplitter 2. Since analyser 2 has its axis of polarization in the X-direction, only scattered light with direction of polarization in the X-direction can pass through analyser 2 before being recorded by the photodiode array. From the intensity of the scattered light, the S_n value related to the surface roughness can be calculated.

It should be noted that each analyser in the optical set-up can be rotated along its optical axis separately. This would allow adaptation of the analysers to changes in the polarization of the incoming laser beam resulting from the reflection/scattering from the test specimen. The recorded signals are processed using a computer connected to a multi-channel switching box, an amplifier and an analogue-to-digital converter. In the signal processing, the background noise introduced by the laser speckle from the optical components in the set-up is separated from the real signal by subtraction of the initial recorded readings from the final readings. The experimental set-up is shown in figure 4.

5. Results and discussion

In total 16 specimens with lapped and flat ground surfaces were tested. The surface roughnesses (R_a) of the specimens that were in the range 0.005–1 μm were also measured separately using a conventional stylus profilometer.

The scattered light intensity distribution, which is expressed by S_n using equation (1), is correlated to the surface roughness R_a as shown in figure 5. The relationship of S_n versus R_a for R_a in the ranges 0.005–0.1 and 0.1–1 μm may be fitted using the following empirical equations:

(i) $S_n = 985.04R_a + 0.478$ with a correlation coefficient of 0.999 (for $0.005\ \mu\text{m} \leqslant R_a \leqslant 0.1\ \mu\text{m}$); and
(ii) $S_n = 16.76\ln(R_a)+91.432$ with a correlation coefficient of 0.988 (for $0.1\ \mu\text{m} \leqslant R_a \leqslant 1\ \mu\text{m}$).

It can be seen that, for the lapped surfaces, there is a linear relation between the scattered light intensity distribution S_n and the surface roughness R_a (in the range 0.005–0.1 μm).

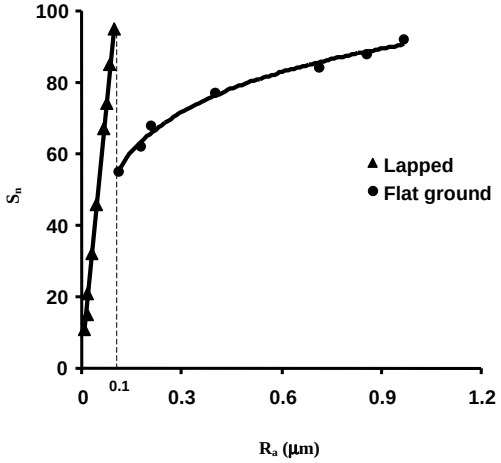

Figure 5. The relation of S_n versus R_a.

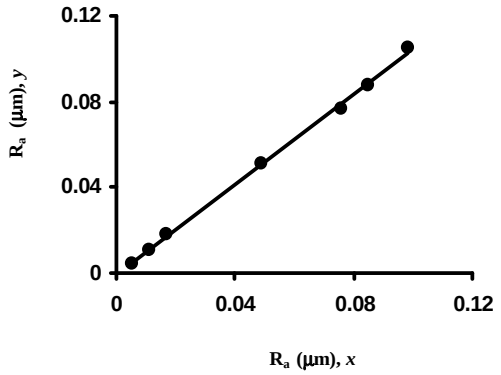

Figure 6. A comparison of results of the present method (y) and the stylus profilometer method (x).

For the flat ground surfaces with R_a in the range 0.1–1 μm, the S_n versus R_a relation is non-linear and the rate of increase of S_n decreases as R_a increases. This indicates that the sensitivity of the method decreases as the roughness value increases. Note that, due to differences among machining processes, the specimens with $R_a = 0.1\ \mu$m have different S_n values [4, 12]. Hence, using the corresponding relations of S_n versus R_a as described in (i) and (ii), the roughness values R_a of lapped and flat ground specimens can be determined.

Figure 6 shows a comparison of the results obtained with the proposed technique (y) and the conventional stylus profilometer method (x) on lapped surfaces with roughnesses (R_a) in the range 0.005–0.1 μm. It can be seen that there is excellent agreement between them and the relation (using the least squares method) is given by $y = 1.06x$ with a correlation coefficient of 0.999.

The relationship of S_Δ versus the micro-displacement δ obtained from equations (7) and (8) is shown in figure 7. It can be seen that there is a linear relationship between S_Δ and δ for values of δ in the range $\pm 300\ \mu$m. For $R_a > 0.1\ \mu$m, there is a relatively lower rate of increase of S_Δ with δ. This indicates that the sensitivity of the method decreases as the roughness value increases. For roughnesses of $R_a \leqslant 0.1\ \mu$m, the relationship of S_Δ versus δ may be fitted using the following empirical equation:

(iii) $S_\Delta = 3.37\delta$ with a correlation coefficient of 0.999.

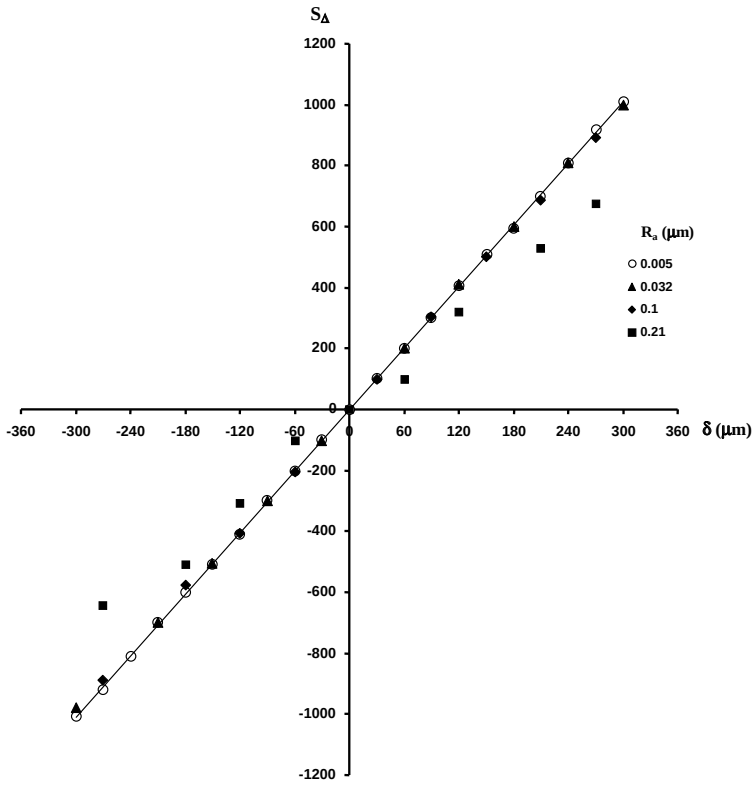

Figure 7. The relation of S_Δ versus δ.

6. Concluding remarks

We have developed a new method for integrated measurement of surface roughness and micro-displacement using a single optical set-up. Since surface roughness and micro-displacement measurements involve similar procedures such as light scattering and triangulation, they are combined in a compact optical set-up using the same light source and recording medium. Using the proposed technique, these two parameters can be determined simultaneously. Results show that the relationships of S_n versus R_a and S_Δ versus δ are linear. Using the proposed technique, micro-displacements of up to $\pm 300\ \mu$m can be determined. However, its sensitivity decreases with increasing in surface roughness. The results suggest that the proposed technique is suitable for integrated measurement of surface roughness and micro-displacement using a single apparatus.

References

[1] Mitsui K 1986 In-process sensors for surface roughness and their applications *Precision Engng.* **8** 212–20

[2] Baumgart J W and Truckenbrodt H 1998 Scatterometry of honed surfaces *Opt. Engng.* **37** 1435–41

[3] Mitsui M, Sakai A and Kizuka O 1988 Development of a high resolution sensor for surface roughness *Opt. Engng.* **27** 498–502

[4] Wang S H and Wu J 1998 Portable laser roughometer *Proc. SPIE* **3558** 293–7

[5] Hüser D and Rothe H 1998 Robust averaging of signals for triangulation sensors *Meas. Sci. Technol.* **9** 1017–23

[6] Tian G Y, Chang N, Liao J B and Zhao Z X 1996 The research of a frequency-modulated displacement sensor *Sensors Actuators* A **55** 153–6

[7] Quan C, Tay C J, Shang H M and Bryanston-Cross P J 1995 Contour measurement by fibre optic fringe projection and Fourier transform analysis *Opt. Commun.* **119** 479–83

[8] Huang P S and Xu X R 1999 Design of an optical probe for surface profile measurement *Opt. Engng.* **38** 1223–8

[9] Rastogi P K 1997 *Optical Measurement Techniques and Applications* (Boston: Artech House) pp 16–8 and 350–9

[10] Beckmann P and Spizzichino A 1987 *The Scattering of Electromagnetic Waves from Rough Surfaces* (Nirwood, MA: Artech House)

[11] Jalkio J A, Bolkcom J E and Case S K 1987 High resolution triangulation based range sensing for metrology *Proc. SPIE* **814** 228–32

[12] Stover J C 1990 *Optical Scattering Measurement and Analysis* (New York: McGraw-Hill)

[13] Fan Y Y and Huynh V M 1992 Investigation of light scattering from rough periodic surfaces-numerical solutions *Opt. Laser Technol.* **24** 145–50

[14] Church E L, Jenkinson H A and Zavada J M 1979 Relationship between surface scattering and microtopographic features *Opt. Engng.* **18** 125–36

[15] Elson J M and Bennett J M 1979 Relation between the angular dependence of scattering and the statistical properties of optical surfaces *J. Opt. Soc. Am.* **69** 31–47

[16] Vorburger T V and Teague E C 1981 Optical techniques for on-line measurement of surface topography *Precision Engng* **24** 61–83

[17] Brodmann R and Gerstorfer O 1985 Optical roughness measuring instrument for fine-machined surfaces *Opt. Engng.* **24** 408–13